Speed Controller with One-touch Fitting
Elbow type
Series AS

RoHS

Features

- Easy to lock.
- Larger handle.
- Improved tube insertion/removal.
- More space beneath the tube. Easier installation/removal of the tube.
- Easy identification of product type, Meter-out: Grey, Meter-in: Light blue.
- Accepts nylon and polyurethane tubing.
- Wide variety of sizes.

How to Order

Applicable tubing O.D. Note 1)

	Metric size
02	ø2
23	ø3.2 Note 2)
04	ø4
06	ø6

Note 1) For selecting applicable tubing O.D., refer to Series Variations
Note 2) Use ø1/8" tubing.

Body size

1	M5 x 0.8 10-32 UNF

Port size

M5	M5 x 0.8
U10/32	10-32 UNF

Body size 1: AS 1 2 0 1 F – M5 – 06 A

Body size 2/3/4: AS 2 2 0 1 F – 01 – 06 S A

Body size

2	1/8, 1/4
3	3/8
4	1/2

Elbow

Port size

01	R1/8
02	R1/4
03	R3/8
04	R1/2

Control type Note)

0	Meter-out
1	Meter-in

Note) For meter-out and meter-in types can be visually identified by colour of the handle.
Meter-out: Grey
Meter-in: Light blue

Applicable tubing O.D. Note 1)

	Metric size
23	ø3.2 Note 2)
04	ø4
06	ø6
08	ø8
10	ø10
12	ø12
16	ø16

Note 1) For selecting applicable tubing O.D., refer to Series Variations.
Note 2) Use ø1/8" tubing.

Seal method

–	Without sealant
S	With sealant

Push-lock type

Symbol

Flow Direction Symbols on Body

	Meter-out type	Meter-in type
Indication symbol		

Product Recommendation

Stocked items for fast delivery

AS1201F-M5-□A	02, 06, 23
AS1211F-M5-□A	04, 06, 23
AS2201F-01-□A	04, 04S, 06, 08, 10S, 23S
AS2201F-02-□A	04S, 06, 08, 10, 10S
AS2211F-01-□A	04S, 06, 06S, 08S, 10S
AS2211F-02-□A	04S, 06, 06S, 08S, 10S
AS3201F-03-□A	06, 06S, 08, 10, 10S, 12, 12S
AS3211F-03-□A	06S, 08S, 10S, 12S
AS4201F-04-□A	10, 10S, 12S
AS4211F-04-□A	10S, 12S

Related Products

Series TU - Tubing - page 1223
Series C(P)96 - ISO Standard Air Cylinder - page 617
Series CQ2 - Compact Air Cylinder - page 653
Series CG3 - Compact Round Body Air Cylinder - page 587

Specifications

Fluid	Air
Proof pressure	1.5 MPa
Max. operating pressure	1 MPa
Min. operating pressure	0.1 MPa
Ambient and fluid temperature	–5 to 60°C (No freezing)
Applicable tubing material	Nylon, Soft nylon, Polyurethane Note)

Note) Use caution at the max. operating pressure when using soft nylon or polyurethane tubing.

Model

Model	Port size	Seal method	Applicable tubing O.D.							
			Metric size							
			2 Note 2)	3.2	4	6	8	10	12	16
AS12□1F-M5	M5 x 0.8	Gasket seal	●	●	●	●				
AS12□1F-U10/32	10-32 UNF		●	●	●	●				
AS22□1F-01	R1/8	Sealant Note 1)		●	●	●	●	●		
AS22□1F-02	R1/4			●	●	●	●	●		
AS32□1F-03	R3/8					●	●	●	●	
AS42□1F-04	R1/2							●	●	●

Note 1) Non-sealant type can be selected as a standard option.
Note 2) Only polyurethane tubing is applicable for ø2.

Speed Controller with One-Touch Fitting
Universal Type
Series AS

Universal type

Features

- Minimises installation time and cost.
- Accepts nylon and polyurethane tubing.
- Wide variety of sizes.
- Body swivels 360°.
- Accurate speed control even at low velocity.

Symbol

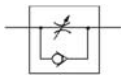

How to Order

AS 2 3 1 1F – 01 – 06 S

Body size

1	M3, M5 standard
2	1/8,1/4 standard
3	3/8 standard
4	1/2 standard

With one-touch fitting

Port size

M3	M3	02	1/4
M5	M5	03	3/8
01	1/8	04	1/2

Control method

0	Meter-out
1	Meter-in

Applicable tubing O.D. Metric size

23	ø3.2	08	ø8
04	ø4 *	10	ø10
06	ø6	12	ø12

* Use a ø1/8 tubing.

Sealant

–	–
S	With sealant

* S is not necessary with M3 and M5, which are not available with sealant. Gaskets are standardized instead.

Lock nut configuration

–	Standard (Round)
K	Hexagon type

Product Recommendation

Stocked items for fast delivery

AS1301F-M5-□	04, 06, 23
AS2301F-01-□	04S, 06S, 08S
AS2301F-02-□	04S, 06S, 08S, 10S
AS2311F-01-□	04S, 06S, 08S
AS3301F-02-□	06S, 08S, 10S
AS3301F-03-□	06S, 08S, 10S, 12S

Related Products

Series TU - Tubing - page 1223
Series C(P)96 - ISO Standard Air Cylinder - page 617
Series CQ2 - Compact Air Cylinder - page 653
Series CG3 - Compact Round Body Air Cylinder - page 587

Specifications

Proof pressure	1.5MPa
Max. operating pressure	1MPa (tube ø2: 0.7MPa)
Min. operating pressure	0.1MPa
Ambient and fluid temperature	–5 to 60°C (With no condensation)
Number of needle rotations	10 rotations (8 rotations Note 1))
Applicable tubing material Note 2)	Nylon, Soft Nylon, Polyurethane
Option	With seal Note 3), Hexagon lock nut, Electroless nickel plated specifications Note 4)

Note 1) In case of types AS1301F-M5 and AS1311F-M5.
Note 2) Pay attention to the maximum operating pressure when soft nylon or polyurethane is used.
Note 3) Types with M3 and M5 port sizes are not available with sealant.
Note 4) Brass parts are all electroless nickel plated.

Model

◉ indicates that electroless nickel plated model (N specification) is the standardized.

Port size	Applicable tubing O.D. Metric size						Applicable cylinder tubing O.D. [mm]	Universal type	
	3.2	4	6	8	10	12		Meter-out	meter-in
M3	◉	◉					2.5, 4, 6	AS1301F-M3	AS1311F-M3
M5	◉	◉	◉				6, 10, 16, 20	AS1301F-M5	AS1311F-M5
R1/8	◉	◉	◉	◉			20, 25, 32	AS2301F-01	AS2311F-01
R1/4		◉	◉	◉	◉		20, 25, 32, 40	AS2301F-02	AS2311F-02
R1/4			◉	◉	◉	◉	40, 50, 63	AS3301F-02	AS3311F-02
R3/8			●	●	●	●	40, 50, 63	AS3301F-03	AS3311F-03
R1/2					●	●	63, 80, 100	AS4301F-04	AS4311F-04

Note 1) The meter-out and meter-in types are visually distinguished by the lock nut. The lock nut of the meter-out type is electroless nickel plated while that of the meter-in type is black zinc chromate plated.

Metal Elbow Speed Controller with Built-in One-Touch FittingElbow Type/Universal Type Elbow Type Series AS

Spatter Proof

Features

- Metal body and flame resistant resin one-touch fitting cassette (to UL94 standard V-0).
- Ideal for heavy duty applicatons.
- Body swivels 360º.
- Meter-in and meter-out options.

How to Order

AS 3 2 0 1 – 03 – F 10 S

Body size

1	M5 standard
2	1/8, 1/4 standard
3	3/8 standard
4	1/2 standard

Elbow type

Control method

0	Meter-out
1	Meter-in

Thread

M5	M5
01	R1/8
02	R1/4
03	R3/8
04	R1/2

With one-touch fitting

Applicable tubing O.D. Metric size

04	ø4
06	ø6
08	ø8
10	ø10
12	ø12

With sealant
* S is not required with M5, which do not have sealant. Types with gasket are standardized instead.

Lock nut configuration

–	Standard (Round)
K	Hexagon lock nut

Symbol

Use of flame resistant resin for one-touch fittings.
(Equivalent to UL-94 Standards V-0)
Elbow type

Product Recommendation

Stocked items for fast delivery

AS1201-M5-F04	AS2201-01-F06S	AS2201-02-F06S	AS3201-03-F08S	AS4201-04-F10S
AS1201-M5-F06	AS2201-01-F08S	AS2201-02-F08S	AS3201-03-F10S	AS4201-04-F12S

Related Products

Series TU - Tubing - page 1223
Series C(P)96 - ISO Standard Air Cylinder - page 617
Series CQ2 - Compact Air Cylinder - page 653
Series CG3 - Compact Round Body Air Cylinder - page 587

Specifications

Proof pressure	1.5MPa
Max. operating pressure	1MPa
Min. operating pressure	0.1MPa
Ambient and fluid temperature	–5 to 60ºC (With no condensation)
Number of needle rotations	10 rotations (8 rotations Note 1))
Applicable tubing material	Nylon, Soft nylon, Polyurethane
Option	Hexagon lock nut, Electroless nickel plated specifications Note 2)

The meter-in and meter-out types are visually distinguished by the lock nut.
The lock nut of the meter-out type is electroless nickel plated while that of the meter-in type is black zinc chromate plated.
Note 1) In case of size M5.
Note 2) Brass parts are all electroless nickel plated.

Model

◉ indicates that electroless nickel plated model (N specification) is the standardized.

Port size	Applicable tubing O.D. Metric size					Applicable cylinder tubing I.D. [mm]	Elbow type	
	4	6	8	10	12		Meter-out	Meter-in
M5	◉	◉				6, 10, 16, 20	AS1201-M5	AS1211-M5
R1/8		◉	◉			20, 25, 32	AS2201-01	AS2211-01
R1/4		◉	◉			20, 25, 32, 40	AS2201-02	AS2211-02
R3/8			●	●		40, 50, 63	AS3201-03	AS3211-03
R1/2				●	●	63, 80, 100	AS4201-04	AS4211-04

For more product options and details see our specific catalogues or on-line information.

Speed Controller with One-touch Fittings Series AS

Features

- 4 types of mounting variations.
- Compact mounting.
- Lightweight.
- Index plate to identify the product and the flow rate.

How to Order

AS 400 2 F – 12

Body size

100	M3, M5 standard
200	1/8 standard
205	1/4 standard
300	3/8 standard
400	1/2 standard

With one-touch fittings

Applicable tube O.D.

Metric size

02	ø2
23	ø3.2*
04	ø4
06	ø6
08	ø8
10	ø10
12	ø12

* Use ø1/8" tube.

Symbol

Flow Direction Symbol on Body

Product Recomendation

Stocked items for fast delivery

AS1002F-02	AS2002F-04	AS3002F-06	AS4002F-10
AS1002F-23	AS2002F-06	AS3002F-08	AS4002F-12
AS1002F-04	AS2002F-07	AS3002F-10	
AS1002F-06	AS2052F-08	AS3002F-12	

Accesories and Related Products

(Accessories)
Series TMH - Holder for Speed Controller - www.smc.eu

(Related Products)
Series TU - Tubing - page 1223

Specifications

Fluid	Air
Proof pressure	1.5 MPa (1.05 MPa Note 1))
Max. operating pressure	1 MPa (0.7 MPa Note 1))
Min. operating pressure	0.1 MPa
Ambient and fluid temperature	–5 to 60°C (No freezing)
Applicable tube material Note 2)	Nylon, Soft nylon, Polyurethane

Note 1) In case of AS1002F-02
Note 2) Use caution at the max. operating pressure when using soft nylon or polyurethane tubing.
Note 3) Brass parts are all electroless nickel plated.

Flow Rate and Effective Area

Series		AS1002F		AS2002F		AS2052F		AS3002F			AS4002F	
Tube O.D.	Metric size	ø2	ø3.2, ø4, ø6	ø4	ø6	ø6	ø8	ø6	ø8	ø10, ø12	ø10	ø12
Controlled flow (Free flow)	Flow rate [ℓ/min (ANR)]	20	100	130	230	290	460	390	660	920	920	1390
	Effective area [mm²]	0.3	1.5	2	3.5	4.5	7	6	10	14	14	21

Note) Flow rate values are measured at 0.5 MPa and 20°C.

Model

Series	Applicable tube O.D. Metric size							Applicable cylinder bore size [mm]
	2	3.2	4	6	8	10	12	
AS1002F	◉	◉	◉	◉				6, 10, 16, 20 Note)
AS2002F			◉	◉				20, 25, 32
AS2052F				◉	◉			20, 25, 32, 40
AS3002F				◉	◉	◉	◉	40, 50, 63
AS4002F						◉	◉	63, 80, 100

Note) The applicable cylinder bore sizes [mm] for AS1002F-02 are 2.5, 4, 6.

Accessories

L-bracket

Part no.	Applicable series
AS-12L	AS1002F-02
AS-10L	AS1002F
AS-20L	AS2002F
AS-25L	AS2052F
AS-30L	AS3002F
AS-40L	AS4002F

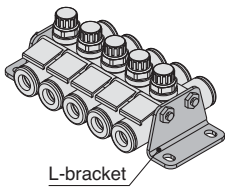

DIN rail mounting bracket

Part no.	Applicable series
AS-10D	AS1002F
AS-20D	AS2002F
AS-25D	AS2052F
AS-30D	AS3002F
AS-40D	AS4002F

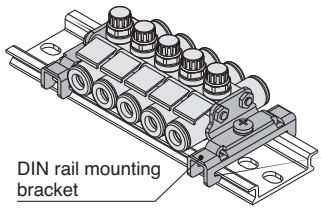

∗ Bracket for AS1002F-02 is not available.

∗ Prepare DIN rail by user.

Part no. list of threaded stud kit for manifold

Model / Metric size	4 stations	6 stations	8 stations	10 stations
AS1002F-02	AS-31B	AS-32B	AS-33B	AS-34B
AS1002F-23	AS-32B	AS-33B	AS-34B	AS-36B
AS1002F-04			AS-35B	
AS1002F-06		AS-34B	AS-36B	AS-37B
AS2002F-04	AS-32B	AS-34B	AS-35B	
AS2002F-06			AS-36B	
AS2052F-06	AS-41B	AS-42B	AS-44B	AS-45B
AS2052F-08				
AS3002F-06	AS-42B	AS-44B	AS-45B	AS-47B
AS3002F-08				
AS3002F-10				
AS3002F-12			AS-46B	
AS4002F-10	AS-43B	AS-45B	AS-47B	AS-48B
AS4002F-12				

Details of threaded stud kit for manifold

Part no.	Threaded stud		Accessories			
	Length	pcs.	Hexagon nut	pcs.	Flat washer	pcs.
AS-31B	38	2	M3	4	M3	4
AS-32B	62	2				
AS-33B	72	2				
AS-34B	90	2				
AS-35B	104	2				
AS-36B	114	2				
AS-37B	135	2				
AS-38B	140	2				
AS-41B	78	2	M4	4	M4	4
AS-42B	111	2				
AS-43B	119	2				
AS-44B	147	2				
AS-45B	179	2				
AS-46B	191	2				
AS-47B	236	2				
AS-48B	277	2				

∗ Precautions when options are ordered
Threaded studs for manifold are not included when L-bracket and DIN rail mounting bracket are ordered. Please order them according to the number of stations.

Ex.) AS2002F-04 When connecting 4 pcs. and mounting L-brackets on both sides
- Speed controller — AS2002F-04 ·····4 pcs.
- L-bracket — AS-20L ·····2 pcs.
- Threaded stud kit for manifold — AS-32B ·····1 pc.

Needle Valve/Flow-rate Characteristics

AS1002F-02

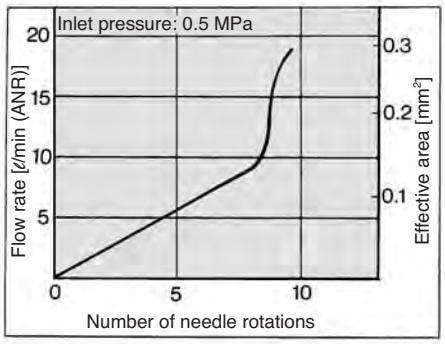

AS1002F

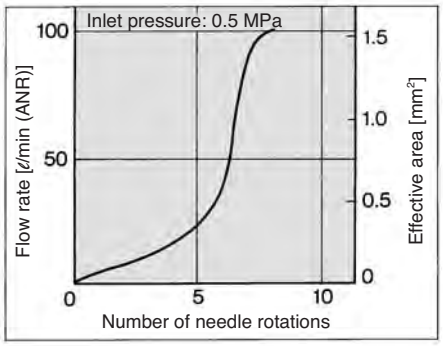

AS2002F

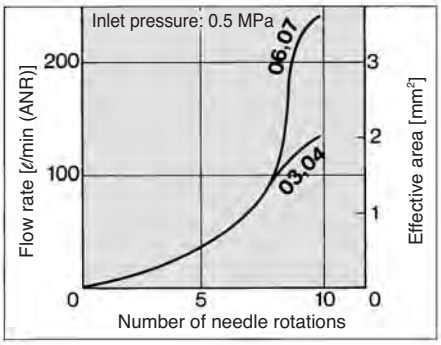

AS2052F

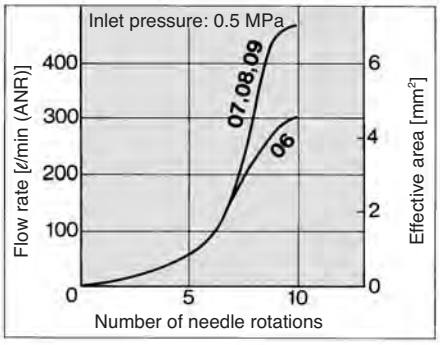

AS3002F

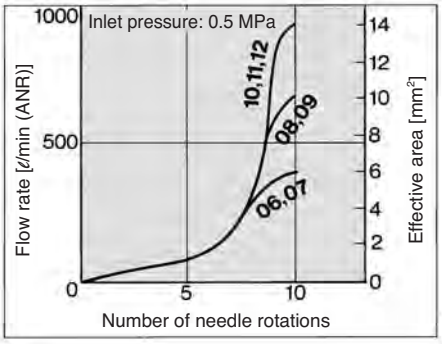

AS4002F

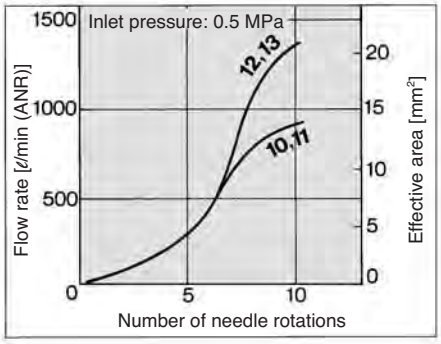

Dimensions

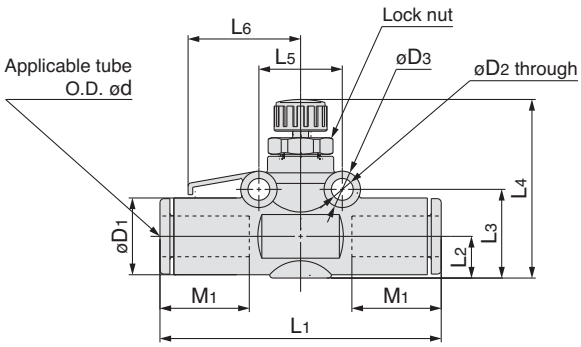

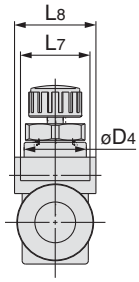

Metric Size

Model	Applicable tube O.D. ød	D_1	D_2	D_3	D_4	L_1	L_2	L_3	L_4 Note)		L_5	L_6	L_7	L_8	M_1	Weight [g]
									MAX.	MIN.						
AS1002F-02	2	6	3.2	5	6	25.4	3.4	7.9	20.9	18.4	11	9.8	5	6.7	8.8	3
AS1002F-23	3.2	8.4	3.3	5.5	9.1	36	4.4	11.1	23.8	21	11	15.4	8.8	9.8	12.7	5
AS1002F-04	4	9.3				37	5.1	11.8	24.5	21.7				10.1		5.5
AS1002F-06	6	11.6				39.5	6.1	12.8	25.5	22.7				12.3	13.5	6.5
AS2002F-04	4	9.3	3.3	5.5	10	40.7	5.2	12.3	28.9	25.4	12.6	17	10.5	11.5	12.7	8.5
AS2002F-06	6	11.6				42.5	6.3	13.4	30	26.5				12.3	13.5	9.5
AS2052F-06	6	12.8	4.3	7.8	14	53.2	6.7	16.3	33.2	28.2	17	22.8	12	15.7	17	19
AS2052F-08	8	15.2				57.2	8	17.6	34.5	29.5				16.1	18	22
AS3002F-06	6	13.2	4.3	8	19.3	59	7.4	19.3	38.6	33.6	22	25	12	20.5	17	36
AS3002F-08	8	15.2				65	8.2	20.1	39.4	34.4					18	38
AS3002F-10	10	18.5				70.8	9.8	21.7	41	36					21	42
AS3002F-12	12	20.9				76	10.9	22.8	42.1	37.1				22.1	22	44
AS4002F-10	10	18.5	4.3	8	25	76.9	10.3	22.7	51.6	44.1	28	33	14	26.2	21	76
AS4002F-12	12	21.7				81.3	11.3	23.7	52.6	45.1					22	82

Note) Reference dimensions

Proper tightening torque for a lock nut is shown in the below table.
For standard installation, turn 15 to 30 using tool, after fastening by hand.
Pay attention not to over torque the product.

Series	Proper tightening torque [N·m]
AS1002F-02	0.07
AS1002F	0.2
AS2002F	0.3
AS2052F	1
AS3002F	2
AS4002F	4

Dimensions

L-bracket

Bracket on a single side

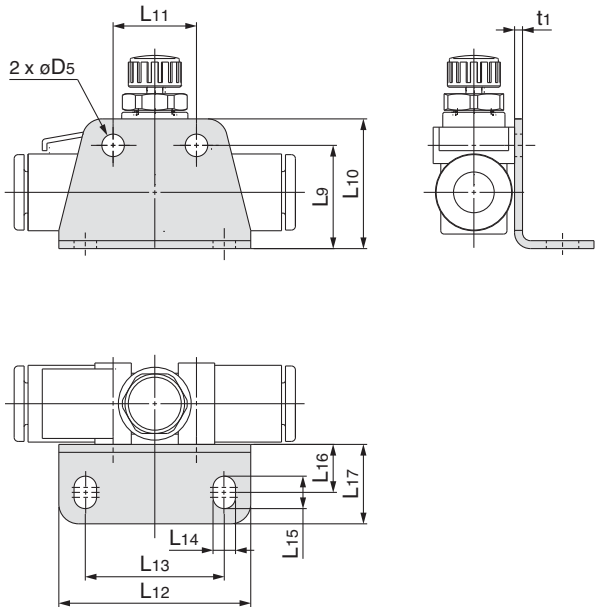

Part no.	Applicable series	D5	L9	L10	L11	L12	L13	L14	L15	L16	L17	t1
AS-12L	AS1002F-02	3.4	9.9	13.4	11	27.5	19.5	3.4	4.9	7.3	12	1
AS-10L	AS1002F		14.8	18.3								
AS-20L	AS2002F		15.6	19.6	12.6	29	21					1.2
AS-25L	AS2052F	4.5	19.6	24.6	17	38	28	4.5	6.5	9.5	15.5	
AS-30L	AS3002F		24.8	29.8	22	43	33					1.4
AS-40L	AS4002F		25.7	30.7	28	49	39					

Brackets on both sides

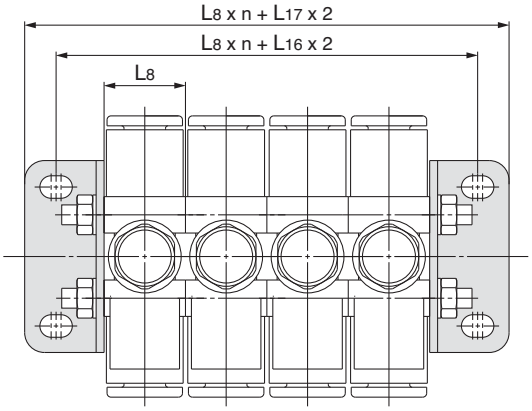

Note 1) Refer to previous page for L_8.
Note 2) The above figure shows the manifold with controllers connected using two L-brackets and a threaded stud kit for manifold.

DIN rail mounting bracket

Bracket on a single side

AS1002F
AS2002F

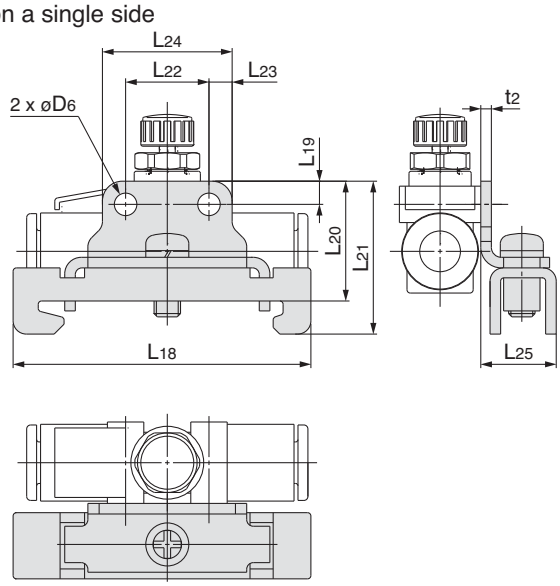

AS2052F
AS3002F
AS4002F

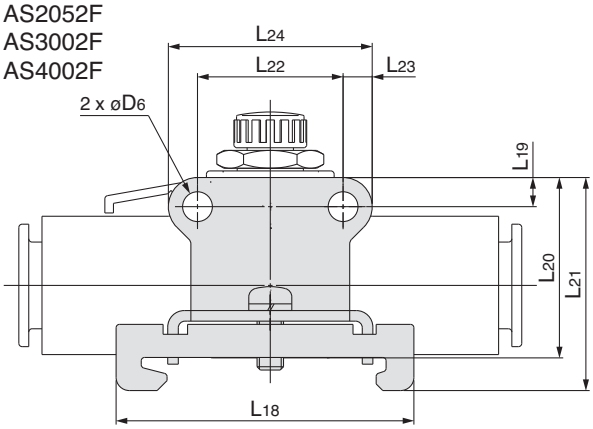

Part no.	Applicable series	D6	L18	L19	L20	L21	L22	L23	L24	L25	t2
AS-10D	AS1002F	3.4	45	3.5	18.2	23.2	11	3.5	18	11.2	1.6
AS-20D	AS2002F				18.6	23.6	12.6		19.6		
AS-25D	AS2052F	4.5		4.4	22	27	17	4.4	25.8		
AS-30D	AS3002F				27.2	32.2	22		30.8		
AS-40D	AS4002F				28.1	33.1	28		36.8		

Brackets on both sides

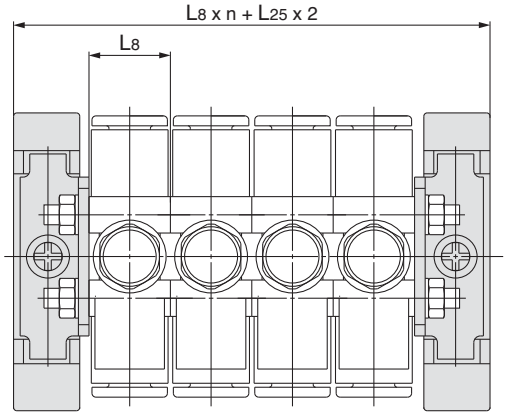

Note 1) Refer to previous page for L_8.
Note 2) The above figure shows the manifold with controllers connected using two DIN rail mounting brackets and a threaded stud kit for manifold.

Speed Controller with Residual Pressure Exhaust Valve Elbow/Universal Type Series AS□□□□FE

Residual Pressure Exhaust

Features

- Residual pressure easily released with one push of button.
- Red colour release button.
- One-touch fitting as standard.
- Meter-in and meter-out flow styles.

How to Order

AS 2 2 1 1F E 01 – 06 S K

Body size

2	1/8, 1/4 standard
3	3/8 standard
4	1/2 standard

Type

2	Elbow
3	Universal

Control method

0	Meter-out
1	Meter-in

With one-touch fitting

With residual pressure exhaust valve

Port size

01	R1/8
02	R1/4
03	R3/8
04	R1/2

Applicable tubing O.D.

Metric size

04	ø4
06	ø6
08	ø8
10	ø10
12	ø12

With sealant

Hexagon lock nut

Symbol

Residual pressure exhaust from cylinder.
Residual pressure easily exhausted with one push.

Product Recommendation

Stocked items for fast delivery

AS2201FE-01-06SK	AS2201FE-02-08SK	AS2201FE-01-08SK
AS2201FE-02-06SK	AS3201FE-03-08SK	AS3201FE-03-10SK

Related Products

Series TU - Tubing - page 1223
Series C(P)96 - ISO Standard Air Cylinder - page 617
Series CQ2 - Compact Air Cylinder - page 653
Series CG3 - Compact Round Body Air Cylinder - page 587

Specifications

Proof pressure	1.5MPa
Max. operating pressure	1MPa
Min. operating pressure	0.1MPa
Ambient and fluid temperature	–5 to 60°C (With no condensation)
Number of needle rotations	10 rotations
Effective sectional area of residual pressure exhaust valve	0.8mm²
Applicable tubing material	Nylon, Soft nylon, Polyurethane

Model

Port size	Applicable tubing O.D. Metric size					Applicable cylinder tubing I.D. [mm]	Elbow type		Universal type	
	4	6	8	10	12		Meter-out	Meter-in	Meter-out	Meter-in
R1/8	●	●	●	●*		20, 25, 32	AS2201FE-01	AS2211FE-01	AS2301FE-01	AS2311FE-01
R1/4	●	●	●	●		20, 25, 32, 40	AS2201FE-02	AS2211FE-02	AS2301FE-02	AS2311FE-02
R3/8		●	●	●	●	40, 50, 63	AS3201FE-03	AS3211FE-03	AS3301FE-03	AS3311FE-03
R1/2				●	●	63, 80, 100	AS4201FE-04	AS4211FE-04	AS4301FE-04	AS4311FE-04

*Elbow type only.
Note 1) Visual distinction between meter-out and meter-in types.
The meter-out and meter-in types can be visually distinguished by the lock nut.
The lock nut of the meter-out type is electroless nickel plated while that of the meter-in type is black zinc chromate plated.

Stainless Steel Speed Controller with One-Touch Fitting Elbow Type/Universal Type Series AS-FG

Corrosion Resistance

Features

- Stainless specifications for use in corrosive environments. Stainless steel 303 used for metal parts.
- Light colours to match equipment.
- Threads with and without seal are available as standard.

How to Order

AS 2 3 1 1 F G – 01 – 06 S

Body size

1	M5 standard
2	1/8,1/4 standard
3	3/8 standard
4	1/2 standard

Type

2	Elbow
3	Universal

Control type

0	Meter-out
1	Meter-in

With one-touch fitting

Stainless steel specifications (SUS303)

Port size

M5	M5
01	1/8
02	1/4
03	3/8
04	1/2

Applicable tubing O.D. Metric size

23	ø3.2 *
04	ø4
06	ø6
08	ø8
10	ø10
12	ø12

* Use a ø1/8 tubing.

Sealant

–	–
S	With sealant

* S is not required with M5, which do not have sealant. Types with gasket are standardized instead.

Symbol

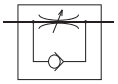

Elbow type

Universal type

Product Recommendation

Stocked items for fast delivery

AS1201-FG-M5-04	AS2201-FG-01-04S	AS2201-FG-02-06S	AS2301-FG-01-06S	AS3201-FG-03-12S
AS1201-FG-M5-06	AS2201-FG-01-06S	AS2201-FG-02-08S	AS3201-FG-03-06S	AS4201-FG-04-10S
AS1211-FG-M5-06	AS2201-FG-01-08S	AS2201-FG-02-10S	AS3201-FG-03-08S	AS4201-FG-04-12S
AS1301-FG-M5-04	AS2201-FG-02-04S	AS2211-FG-01-06S	AS3201-FG-03-10S	

Related Products

Series TU - Tubing - page 1223
Series C(P)96 - ISO Standard Air Cylinder - page 617
Series CQ2 - Compact Air Cylinder - page 653
Series CG3 - Compact Round Body Air Cylinder - page 587

Specifications

Proof pressure	1.5MPa
Max. operating pressure	1MPa
Min. operating pressure	0.1MPa
Ambient and fluid temperature	–5 to 60°C (With no condensation)
Number of needle rotations	10 rotations (8 rotations Note 1))
Applicable tubing material Note 2)	Nylon, Soft nylon, Polyurethane, Soft polyurethane

Note 1) In case of AS1201FG, AS1211FG, AS1301FG, AS1311FG.
Note 2) Pay attention to the maximum operating pressure when soft nylon, polyurethane or soft polyurethane is used.

Model

Port size	Applicable tubing O.D. Metric size						Applicable cylinder tubing I.D. [mm]	Elbow type		Universal type	
	3.2	4	6	8	10	12		Meter-out	Meter-in	Meter-out	Meter-in
M5	●	●	●				6,10,16,20	AS1201FG-M5	AS1211FG-M5	AS1301FG-M5	AS1311FG-M5
R1/8	●	●	●	●	●*		20,25,32	AS2201FG-01	AS2211FG-01	AS2301FG-01	AS2311FG-01
R1/4		●	●	●	●		20,25,32,40	AS2201FG-02	AS2211FG-02	AS2301FG-02	AS2311FG-02
R1/4			●	●	●	●	40,50,63	AS3201FG-02	AS3211FG-02	AS3301FG-02	AS3311FG-02
R3/8			●	●	●	●	40,50,63	AS3201FG-03	AS3211FG-03	AS3301FG-03	AS3311FG-03
R1/2					●	●	63,80,100	AS4201FG-04	AS4211FG-04	AS4301FG-04	AS4311FG-04

*Elbow type only.
Note 1) The meter-in and meter-out types are visually distinguished by the flow direction symbol on the resin body.

Stainless Steel Speed Controller with One-Touch Fitting In-Line Type Series AS-FG

Corrosion Resistance

Features

- Stainless specifications for use in corrosive environments. Stainless steel 303 used for metal parts.
- Light colours to match equipment.
- Threads with and without seal are available as standard.

How to Order

AS 200 1 F G – 06

Body size

100	M5 standard
200	1/8 standard
205	1/4 standard
300	3/8 standard
400	1/2 standard

With one-touch fitting

Stainless steel specifications (SUS303)

Applicable tubing O.D.
Metric size

23	ø3.2 *
04	ø4
06	ø6
08	ø8
10	ø10
12	ø12

* Use a ø1/8 tubing.

Symbol

Product Recommendation

Stocked items for fast delivery

AS1001-FG-F04	AS2001-FG-F04	AS2051-FG-F06	AS3001-FG-F06	AS3001-FG-F10
AS1001-FG-F06	AS2001-FG-F06	AS2051-FG-F08	AS3001-FG-F08	

Accessories and Related Products

Accessories
Series TMH - Holder for speed controllers - www.smc.eu

Related Products
Series TU - Tubing - page 1223
Series C(P)96 - ISO Standard Air Cylinder - page 617
Series CQ2 - Compact Air Cylinder - page 653
Series CG3 - Compact Round Body Air Cylinder - page 587

Specifications

Proof pressure	1.5MPa
Max. operating pressure	1MPa
Min. operating pressure	0.1MPa
Ambient and fluid temperature	–5 to 60°C (With no condensation)
Number of needle rotations	10 rotations (8 rotations Note 1))
Applicable tubing material Note 2)	Nylon, Soft nylon, Polyurethane, Soft polyurethane

Note 1) In case of AS1001FG.
Note 2) Pay attention to the maximum operating pressure when soft nylon, polyurethane or soft polyurethane is used.

Model

Model	Applicable tubing O.D. Metric size						Applicable cylinder tubing I.D. [mm]
	3.2	4	6	8	10	12	
AS1001FG	●	●	●				6, 10, 16, 20
AS2001FG		●	●				20, 25, 32
AS2051FG			●	●			20, 25, 32, 40
AS3001FG			●	●	●	●	40, 50, 63
AS4001FG					●	●	63, 80, 100

Applicable tubing O.D. [mm]	Model Inline type
3.2	AS1001FG-23
4	AS1001FG-04
	AS2001FG-04
6	AS1001FG-06
	AS2001FG-06
	AS2051FG-06
	AS3001FG-06

Applicable tubing O.D. [mm]	Model Inline type
8	AS2051FG-08
	AS3001FG-08
10	AS3001FG-10
	AS4001FG-10
12	AS3001FG-12
	AS4001FG-12

Speed Controller for Low Speed Operation with One-Touch Fitting Elbow Type/Universal Type Series AS-FM

Low Speed Operation

Features

- Suitable for low speed applications; 10-50mm/sec.
- Accurate control of low speed cylinders with effective orifice for control flow at 1/10 of standard types.
- Possible to operate cylinders at low speed for working strokes and high speed for return strokes.
- Easy control with 10 turns (20 turns for M5 type) of needle rotation.

Symbol

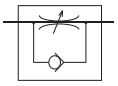

How to Order

AS 2 2 0 1 F M – 01 – 06 S

Body size

1	M5 standard
2	1/8,1/4 standard

Type

2	Elbow
3	Universal

Control method

0	Meter-out
1	Meter-in

With one-touch fitting

For low speed control

Port size

M5	M5
01	1/8
02	1/4

Applicable tubing O.D.
Metric size

23	ø3.2*
04	ø4
06	ø6
08	ø8
10	ø10

* Use a ø1/8 tubing.

Sealant

–	–
S	With sealant

* S is not required with M5, which do not have sealant. Types with gasket are standardized instead.

Elbow type

Universal type

Product Recommendation

Stocked items for fast delivery

AS1201FM-M5-04	AS1211FM-M5-06	AS2201FM-01-06S	AS2201FM-01-08S	AS2211FM-02-06S
AS1201FM-M5-06	AS1301FM-M5-04	AS2201FM-01-08S	AS2201FM-01-10S	AS2211FM-02-08S
AS1201FM-M5-23	AS1301FM-M5-06	AS2201FM-01-23S	AS2211FM-01-04S	AS2301FM-01-06S
AS1211FM-M5-04	AS2201FM-01-04S	AS2201FM-02-06S	AS2211FM-01-06S	AS2301FM-02-06S
				AS2311FM-01-06S

Related Products

Series TU - Tubing - page 1223
Series C(P)96 - ISO Standard Air Cylinder - page 617
Series CQ2 - Compact Air Cylinder - page 653
Series CG3 - Compact Round Body Air Cylinder - page 587

Specifications

Proof pressure	1.5MPa
Max. operating pressure	1MPa
Min. operating pressure	0.1MPa
Ambient and fluid temperature	–5 to 60°C (With no condensation)
Number of needle rotations	10 rotations (20 rotations Note 1))
Applicable tubing material	Nylon, Soft nylon, Polyurethane, Soft poly urethane
Option	With sealant

Note 1) In case of AS1201FM, AS1211FM, AS1301FM, AS1311FM.

Model

Port size	Applicable tubing O.D. Metric size					Elbow type		Universal type	
	3.2	4	6	8	10	Meter-out	Meter-in	Meter-out	Meter-in
M5	●	●	●			AS1201FM-M5	AS1211FM-M5	AS1301FM-M5	AS1311FM-M5
R1/8	●	●	●	●		AS2201FM-01	AS2211FM-01	AS2301FM-01	AS2311FM-01
R1/4		●	●	●	●	AS2201FM-02	AS2211FM-02	AS2301FM-02	AS2311FM-02

Speed Controller for Low Speed Operation
In-Line Type
Series AS-FM

Low Speed Operation

Features

- Suitable for low speed applications; 10-50mm/sec.
- Accurate control of low speed cylinders with effective orifice for control flow at 1/10 of standard types.
- Possible to operate cylinders at low speed for working strokes and high speed for return strokes.
- Easy control with 10 turns (20 turns for M5 type) of needle rotation.

Symbol

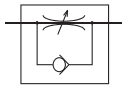

How to Order

AS 200 1 F M – 06

Body size

100	M5 standard
200	1/8 standard
205	1/4 standard

With one-touch fitting

For low speed control

Applicable tubing O.D.

Metric size

23	ø3.2 *
04	ø4
06	ø6
08	ø8

* Use a ø1/8 tubing.

Product Recommendation

Stocked items for fast delivery

AS1001FM-04	AS2001FM-04	AS2051FM-06
AS1001FM-06	AS2001FM-06	AS2051FM-08

Accessories and Related Products

Accessories
Series TMH - Holder for speed controllers - www.smc.eu

Accesories
Series TU - Tubing - page 1223
Series C(P)96 - ISO Standard Air Cylinder - page 617
Series CQ2 - Compact Air Cylinder - page 653
Series CG3 - Compact Round Body Air Cylinder - page 587

Specifications

Proof pressure	1.5MPa
Max. operating pressure	1MPa
Min. operating pressure	0.1MPa
Ambient and fluid temperature	–5 to 60°C (With no condensation)
Number of needle rotations	10 rotations (20 rotations Note 1))
Applicable tubing material Note 2)	Nylon, Soft nylon, Polyurethane, Soft polyurethane

Note 1) In case of AS1001FM.
Note 2) Pay attention to the maximum operating pressure when soft nylon, polyurethane or soft polyurethane is used.

Model

Model	Applicable tubing O.D. Metric Size				Applicable cylinder tubing I.D. [mm]
	3.2	4	6	8	
AS1001FM	●	●	●		6, 10, 16, 20
AS2001FM		●	●		20, 25, 32
AS2051FM			●	●	20, 25, 32, 40

Applicable tubing O.D. [mm]	Model Inline Type
3.2	AS1001FM-23
4	AS1001FM-04
	AS2001FM-04
6	AS1001FM-06
	AS2001FM-06
	AS2051FM-06
8	AS2051FM-08

Tamper Proof Speed Controller
Elbow/Universal Type
Series AS□□□1F

Features

- Tamper resistant adjustment.
- Body swivels 360°.
- Accurate speed control at low velocity.
- Meter-in and meter-out option.
- Retainer prevents accidental loss of needle.
- Available as elbow or universal body type.

Symbol

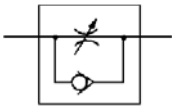

How to Order

AS 2 2 1 1 F – 01 06 S D

Body size

1	M5 standard
2	1/8, 1/4 standard
3	3/8 standard
4	1/2 standard

Type

2	Elbow
3	Universal

Control method

0	Meter-out
1	Meter-in

With one-touch fitting

Port size

M5	M5
01	R1/8
02	R1/4
03	R3/8
04	R1/2

Applicable tubing O.D.
Metric size

23	ø3.2 *
04	ø4
06	ø6
08	ø8
10	ø10
12	ø12

* Use ø1/8 tube.

With sealant
Note) S is not necessary in case of types with a M5 port, which do not have sealant. Types with gasket are standardized.

Adjusting type

T	Tamper proof
D	Flat head screwdriver

Flow rate control with special tools for safety measures.

Elbow type

Universal type

Special tool (AS-T-1)

Product Recommendation

Stocked items for fast delivery

AS2201F-01-04SD	AS2201F-01-08SD	AS2201F-02-08SD	AS2301F-01-08SD	AS3201F-03-06SD
AS2201F-01-04ST	AS2201F-01-08ST	AS2201F-02-08ST	AS3201F-02-06SD	AS3201F-03-08SD
AS2201F-01-06SD	AS2201F-02-06SD	AS2201F-02-10SD	AS3201F-02-10SD	AS3201F-03-08ST
AS2201F-01-06ST	AS2201F-02-06ST	AS2301F-01-06SD	AS3201F-02-12SD	AS3201F-03-10SD
				AS3201F-03-10ST
				AS3201F-03-12SD

Related Products

Series TU - Tubing - page 1223
Series C(P)96 - ISO Standard Air Cylinder - page 617
Series CQ2 - Compact Air Cylinder - page 653
Series CG3 - Compact Round Body Air Cylinder - page 587

Specifications

Proof pressure	1.5MPa
Max. operating pressure	1MPa
Min. operating pressure	0.1MPa
Ambient and fluid temperature	–5 to 60°C (With no condensation)
Number of needle rotations	10 rotations (8 rotations Note1))
Applicable tubing material Note 2)	Nylon, Soft nylon, Polyurethane

Note1) In case of AS1201F-M5 and AS1211F-M5 types.
In case of AS1301F-M5 and AS1311F-M5 types.
Note2) Pay attention to the maximum operating pressure when soft nylon or polyurethane is used.
Note3) Brass parts of standard products are all electroless nickel plated.

Model

Port size	Applicable tubing O.D. Metric size						Applicable cylinder tubing I.D. [mm]	Elbow type		Universal type	
	3.2	4	6	8	10	12		Meter-out	Meter-in	Meter-out	Meter-in
M5	●	●	●				6,10,16,20	AS1201F-M5	AS1211F-M5	AS1301F-M5	AS1311F-M5
R1/8	●	●	●	●	●*		20,25,32	AS2201F-01	AS2211F-01	AS2301F-01	AS2311F-01
R1/4		●	●	●	●		20,25,32,40	AS2201F-02	AS2211F-02	AS2301F-02	AS2311F-02
R1/4			●	●	●	●	40,50,63	AS3201F-02	AS3211F-02	AS3301F-02	AS3311F-02
R3/8			●	●	●	●	40,50,63	AS3201F-03	AS3211F-03	AS3301F-03	AS3311F-03
R1/2					●	●	63,80,100	AS4201F-04	AS4211F-04	AS4301F-04	AS4311F-04

Note 1) *Elbow type only.
Note 2) The meter-in and meter-out types are visually distinguished by the flow direction symbol on the resin body.

For more product options and details see our specific catalogues or on-line information.

Tamper Proof Speed Controller
In-Line Type
Series AS□□□1F

Flow control with special tools.
For safety measures.

Features

- Tamper resistant adjustment.
- Constant speed easily set.
- Retainer prevents accidental loss of needle.
- Optional holder gives flexibility of mounting.
- Wide variety of sizes.
- All brass parts electroless nickel plated.

Symbol

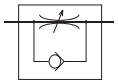

How to Order

AS 200 1F – 06 D

Body size

100	M5 standard
200	1/8 standard
205	1/4 standard
300	3/8 standard
400	1/2 standard

With one-touch fitting

Adjusting type

T	Tamper proof
D	Flat head screwdriver

Applicable tubing O.D.
Metric size

23	ø3.2 *	08	ø8
04	ø4	10	ø10
06	ø6	12	ø12

*Use ø1/8 tube.

Special tool (AS-T-1)

Product Recommendation

Stocked items for fast delivery

AS1001F-04D	AS1001F-23D	AS2051F-06D	AS3001F-10D
AS1001F-04T	AS2001F-04T	AS2051F-08D	
AS1001F-06D	AS2001F-06D	AS2051F-08T	
AS1001F-06T	AS2001F-06T	AS3001F-08D	

Accessories and Related Products

Accessories
Series TMH - Holder for Speed Controllers - www.smc.eu

Related Products
Series TU - Tubing - page 1223
Series C(P)96 - ISO Standard Air Cylinder - page 617
Series CQ2 - Compact Air Cylinder - page 653
Series CG3 - Compact Round Body Air Cylinder - page 587

Specifications

Proof pressure	1.5MPa
Max. operating pressure	1MPa
Min. operating pressure	0.1MPa
Ambient and fluid temperature	–5 to 60°C (With no condensation)
Number of needle rotations	10 rotations (8 rotations Note1))
Applicable tubing material Note 2)	Nylon, Soft nylon, Polyurethane

Note1) In case of AS1001F.
Note2) Pay attention to the maximum operating pressure when soft nylon or polyurethane is used.

Model

Model	Applicable tubing O.D. Metric size						Applicable cylinder tubing I.D. [mm]
	3.2	4	6	8	10	12	
AS1001F	●	●	●				6, 10, 16, 20
AS2001F		●	●				20, 25, 32
AS2051F			●	●			20, 25, 32, 40
AS3001F			●	●	●	●	40, 50, 63
AS4001F					●	●	63, 80, 100

Applicable tubing O.D. [mm]	Model In-line type
3.2	AS1001F-23T/D
4	AS1001F-04T/D
	AS2001F-04T/D
6	AS1001F-06T/D
	AS2001F-06T/D
	AS2051F-06T/D
	AS3001F-06T/D

Applicable tubing O.D. [mm]	Model In-line type
8	AS2051F-08T/D
	AS3001F-08T/D
10	AS3001F-10T/D
	AS4001F-10T/D
12	AS3001F-12T/D
	AS4001F-12T/D

Speed Controller with Pilot Check Valve
Universal Type
Series ASP

Drop Prevention

Features

- Two individual products combined into one unit.
- Compact, space saving solution which can be directly mounted to the actuator.
- One touch fitting makes piping easier and body swivels 360°.
- Brass parts electroless nickel plated as standard.
- The speed controller with pilot check valve is used to stop the cylinder. in mid stroke for extended periods of time when air is cut-off.

How to Order

ASP 3 3 0 F – 01 – 06 S

- ASP: Pilot check valve
- 3: Body size
- 3: Type
- F: With one-touch fitting
- 01: Port size
- 06: Applicable tubing O.D. Metric size
- S: With sealant

Body size

3	1/8 Standard
4	1/4 Standard
5	3/8 Standard
6	1/2 Standard

Type

3	Universal

Applicable tubing O.D. Metric size

06	ø6
08	ø8
10	ø10
12	ø12

Port size

Symbol	Cylinder side	Pilot port
01	R1/8	M5
02	R1/4	Rc1/8
03	R3/8	Rc1/8
04	R1/2	Rc1/4

Product Recommendation

Stocked items for fast delivery

ASP330F-01-06S	ASP430F-02-06S	ASP530F-03-08S	ASP630F-04-10S
ASP330F-01-08S	ASP430F-02-08S	ASP530F-03-10S	ASP630F-04-12S

Related Products

Series TMH - Holder for Speed Controllers - www.smc.eu
Series AS - Speed Controllers - page 1238
Series TU - Tubing - page 1223
Series C(P)96 - ISO Standard Air Cylinder - page 617
Series CQ2 - Compact Air Cylinder - page 653
Series CG3 - Compact Round Body Air Cylinder - page 587

Specifications

Proof pressure	1.5MPa
Max. operating pressure	1MPa
Min. operating pressure	0.1MPa
Pilot check valve operating pressure	50% or more the operating pressure
Ambient and fluid temperature	–5 to 60°C (With no condensation)
Number of needle rotations	10 rotations
Applicable tubing material	Nylon, Soft nylon, Polyurethane

Note) Pay attention to the maximum operating pressure when soft nylon or polyurethane is used.

Model

Model	Port size	Applicable tubing O.D. Metric size				Pilot port
		6	8	10	12	
ASP330F-01	R1/8	●	●			M5
ASP430F-02	R1/4	●	●			Rc1/8
ASP530F-03	R3/8		●	●		Rc1/8
ASP630F-04	R1/2			●	●	Rc1/4

Note) Brass parts are all electroless nickel plated.

■ Applicable tubing O.D.: Metric Size

Symbol

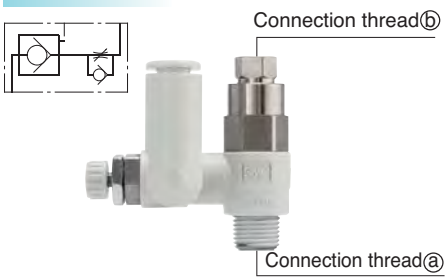

Built-in pilot check valve to prevent drop down.
Temporary intermediate stop.

Applicable tubing O.D. [mm]	Connection thread ⓐ	Connection thread ⓑ	Model Universal type
6	R1/8	M5	ASP330F-01-06S
	R1/4	Rc1/8	ASP430F-02-06S
8	R1/8	M5	ASP330F-01-08S
	R1/4	Rc1/8	ASP430F-02-08S
	R3/8	Rc1/8	ASP530F-03-08S
10	R3/8	Rc1/8	ASP530F-03-10S
	R1/2	Rc1/4	ASP630F-04-10S
12	R1/2	Rc1/4	ASP630F-04-12S

Speed Controller for Clean Room Elbow Type Series AS-FPQ/FPG

Features

- Polypropylene one touch fitting.
- Low particulate generating - ideal for clean room.
- Meter-out and meter-in flow styles.

AS-FPQ/Brass (Electroless nickel plated)
Release button color: Light grey

AS-FPG/Stainless steel (SUS304)
Release button color: Light blue

How to Order

AS 2 2 0 1 F P G – 01 – 06

Body size

1	M5 standard
2	1/8, 1/4 standard
3	3/8 standard
4	1/2 standard

Type

2	Elbow

Control method

0	Meter-out
1	Meter-in

With one-touch fitting

Clean specification

Metal part material

Q	Brass (Electroless nickel plated)
G	Stainless steel (SUS304)

Port size

M5	M5
01	1/8
02	1/4
03	3/8
04	1/2

Applicable tubing O.D.
Metric size

04	ø4
06	ø6
08	ø8
10	ø10
12	ø12

Symbol

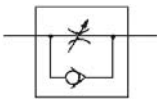

Product Recommendation

Stocked items for fast delivery

AS1201FPG-M5-04	AS1211FPG-M5-06	AS2201FPG-02-06
AS1201FPG-M5-06	AS2201FPG-01-06	AS2201FPG-02-08

Related Products

Series TU - Tubing - page 1223
Series C(P)96 - ISO Standard Air Cylinder - page 617
Series CQ2 - Compact Air Cylinder - page 653
Series CG3 - Compact Round Body Air Cylinder - page 587

Specifications

Particle generation grade	Grade 1 Note 1)
Proof pressure (20°C)	1.5MPa
Max. operating pressure (20°C)	1MPa Note 2)
Min. operating pressure	0.1MPa
Ambient and fluid temperature	–5 to 60°C (With no condensation)
Number of needle rotations	10 rotations (8 rotations Note 3))

Note 1) Refer to the particle generation grading chart.
Note 2) The max. operating pressure is one at 20°C.
Note 3) AS12□1FP□ only.

Recommended Applicable Tubing

Tubing material	Clean series polyurethane tubing: Series 10–
Tubing O.D.	ø4, ø6, ø8, ø10, ø12

Polyurethane tubing: Series TU, Nylon tubing: Series T,
Soft nylon tubing: Series TS can also be used though with lower degree of cleanliness.

Model

Port size	Applicable tubing O.D. Metric size					Applicable cylinder tubing I.D. [mm]	Elbow type	
	4	6	8	10	12		Meter-out	Meter-in
M5	●	●				6, 10, 16, 20	AS1201FP□-M5	AS1211FP□-M5
R1/8	●	●	●			20, 25, 32	AS2201FP□-01	AS2211FP□-01
R1/4	●	●	●	●		20, 25, 32, 40	AS2201FP□-02	AS2211FP□-02
R3/8		●	●	●	●	40, 50, 63	AS3201FP□-03	AS3211FP□-03
R1/2				●	●	63, 80, 100	AS4201FP□-04	AS4211FP□-04

Particulate Generation Grade Classifications

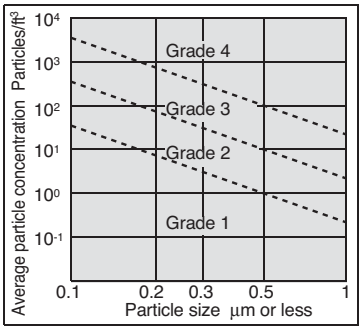

Relation between Operating Temp. and Max. Operating Pressure

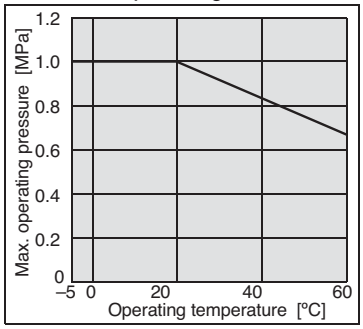

Speed Exhaust Controller Elbow Type/Tee Type Series ASV

Quick Exhaust

Features

- Three functions from a single component.
- Minimises installation time and cost.
- Accepts nylon and polyurethane tubing.
- Wide variety of sizes M3 to 1/2.
- Integral One Touch fitting - 4mm to 12mm.
- Excellent control characteristics.
- Compact design.

Symbol

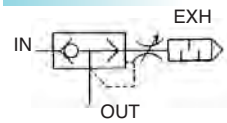

How to Order

ASV 3 1 0 F – 01 – 06 S

Body size

1	M3 standard
2	M5 standard
3	1/8 standard
4	1/4 standard
5	3/8 standard

Model

1	Union tee
2	Elbow Note1)

Note 1) Only M3 and M5 for the elbow type.

With one-touch fitting

Port size

M3	M3
M5	M5
01	R1/8
02	R1/4
03	R3/8
04	R1/2

Applicable tubing O.D. Metric size

04	ø4
06	ø6
08	ø8
10	ø10
12	ø12

Sealant

Symbol	Sealant	Applicable model
–	Without sealant	ASV120F, 220F
S	With sealant	ASV310F, 410F, 510F

Product Recommendation

Stocked items for fast delivery

ASV120F-M3-04	ASV310F-01-08S	ASV410F-02-08S	ASV510F-02-12S
ASV220F-M5-04	ASV310F-02-06S	ASV410F-02-10S	ASV510F-03-10S
ASV220F-M5-06	ASV310F-02-08S	ASV410F-03-08S	ASV510F-03-12S
ASV310F-01-06	ASV410F-01-08S	ASV410F-03-10S	ASV510F-04-10S
ASV310F-01-06S	ASV410F-01-10S	ASV510F-02-10S	ASV510F-04-12S

Related Products

Series TMH - Holder for Speed Controllers - www.smc.eu
Series AS - Speed Controllers - page 1238
Series TU - Tubing - page 1223
Series C(P)96 - ISO Standard Air Cylinder - page 617
Series CQ2 - Compact Air Cylinder - page 653
Series CG3 - Compact Round Body Air Cylinder - page 587

Specifications

Series	ASV120F	ASV220F	ASV310F, 410F	ASV510F
Proof pressure	1.5MPa			
Max. operating pressure	1MPa			
Min. operating pressure	0.1MPa			
Ambient and fluid temperature	–5 to 60°C (With no condensation)			
Number of needle rotations	10 rotations	8 rotations	12 rotations	15 rotations
Applicable tubing material Note 1)	Nylon, Soft nylon, Polyurethane			
Option	With spatter cover			

Note 1) Pay attention to the maximum operating pressure when soft nylon, polyurethane is used.

Model

Model	Port size	Applicable tubing O.D. Metric size				
		4	6	8	10	12
ASV120F-M3	M3	●				
ASV220F-M5	M5	●	●			
ASV310F-01	R1/8		●	●		
ASV310F-02	R1/4		●	●		
ASV410F-01	R1/8			●	●	
ASV410F-02	R1/4			●	●	
ASV410F-03	R3/8			●	●	
ASV510F-02	R1/4				●	●
ASV510F-03	R3/8				●	●
ASV510F-04	R1/2				●	●

Integration of a quick exhaust valve and an exhaust restrictor. Permits high-speed cylinder operation.

Applicable tubing O.D. [mm]	Connection thread	Model Elbow type
4	M3	ASV120F-M3-04
	M5	ASV220F-M5-04
6	M5	ASV220F-M5-06

Applicable tubing O.D. [mm]	Connection thread	Model Tee type
6	R1/8	ASV310F-01-06S
	R1/4	-02-06S
8	R1/8	ASV310F-01-08S
	R1/4	-02-08S
	R1/8	ASV410F-01-08S

Applicable tubing O.D. [mm]	Connection thread	Model Tee type
8	R1/4	ASV410F-02-08S
	R3/8	-03-08S
10	R1/8	ASV410F-01-10S
	R1/4	-02-10S
	R3/8	-03-10S
	R1/4	ASV510F-02-10S
	R3/8	-03-10S
	R1/2	-04-10S
12	R1/4	ASV510F-02-12S
	R3/8	-03-12S
	R1/2	-04-12S

For more product options and details see our specific catalogues or on-line information.